Oxford Cambridge and RSA

Tuesday 14 May 2024 – Afternoon

AS Level Computer Science

H046/01 Computing Principles

Time allowed: 1 hour 15 minutes

Do not use:
- a calculator

Please write clearly in black ink. **Do not write in the barcodes.**

Centre number | | | | | | Candidate number | | | | |

First name(s) _____

Last name _____

INSTRUCTIONS
- Use black ink.
- Write your answer to each question in the space provided. You can use extra paper if you need to, but you must clearly show your candidate number, the centre number and the question numbers.
- Answer **all** the questions.

INFORMATION
- The total mark for this paper is **70**.
- The marks for each question are shown in brackets **[ ]**.
- Quality of extended response will be assessed in questions marked with an asterisk (*).
- This document has **16** pages.

ADVICE
- Read each question carefully before you start your answer.

© OCR 2024 [601/5030/0]
DC (ST/SG) 309118/4
OCR is an exempt Charity

Answer **all** the questions.

1 Here is a diagram of a computer system.

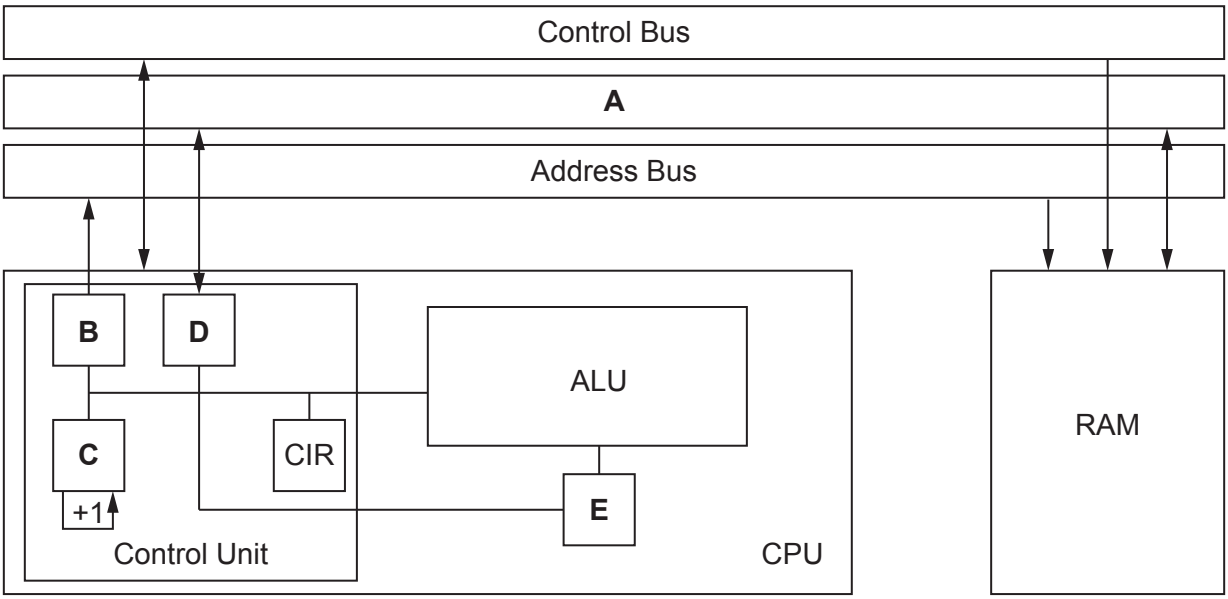

Identify each of the labelled components in this computer system.

A	
B	
C	
D	
E	

[5]

© OCR 2024

2* Most modern computers are designed using Von Neumann Architecture. However, in some cases Harvard Architecture may be preferred.

Discuss the difference between Von Neumann Architecture and Harvard Architecture.

You should refer to the following in your answer:

- the different approaches each architecture takes to storing instructions and data
- the benefits of using a Von Neumann Architecture approach
- the benefits of using a Harvard Architecture approach. **[9]**

.....

.....

.....

.....

.....

.....

.....

.....

.....

.....

.....

.....

.....

.....

.....

.....

.....

.....

.....

.....

.....

.....

.....

© OCR 2024

© OCR 2024

3 A secondary school is upgrading their computers. They decide to install “thin client” computers. A thin client computer is when users access their computer in the usual way with a keyboard, mouse and monitor. However, all processing takes place on the virtual machine on a server rather than the computer at their desk.

(a)
(i) Describe **one** advantage of using virtual machines in this way.

.....

.....

.....

..... **[2]**

(ii) Describe **one** disadvantage of using virtual machines in this way.

.....

.....

.....

..... **[2]**

© OCR 2024

(b) Each virtual machine will run an operating system. One type of operating system is multi-user.

Describe **two** other types of operating system and give an example of where each may be used.

TYPE 1

Description .....

.....

.....

.....

Example .....

.....

TYPE 2

Description .....

.....

.....

.....

Example .....

.....

[6]

(c) The virtual machines will have utility software and application software installed.

(i) Describe the difference between utility software and application software.

.....

.....

.....

..... **[2]**

© OCR 2024

(ii) The application software installed will be used by students to complete their school work.

Name **two** different types of application software that may be used by students, giving an example of how each may be used.

TYPE 1

Name .....

.....

Example .....

.....

TYPE 2

Name .....

.....

Example .....

.....

[4]

(iii) The application software installed on the virtual machines can be closed source software or open source software.

Explain **one** advantage to the school of using open source software.

.....

.....

.....

..... **[2]**

(d) Name **three** different types of utility software.

1 .....

.....

2 .....

.....

3 .....

.....

[3]

© OCR 2024

4 All source code needs to be translated into object code using a translator.

(a) Tick **one** box in each row to indicate which type of translator is being used.

	Compiler	Interpreter	Assembler
Creates an executable file			
Creates one line of object code for each line of source code			
Translates all the high-level code at once			
A program needs to be translated each time it is run			

[4]

(b) A software development company has written a new computer game in a high-level language.

Identify which type of translator would be the most suitable for the computer game and give a reason why.

Type .....

.....

Reason .....

.....

[2]

© OCR 2024

(c) The pseudocode algorithm here will take in two numbers from the user, multiply them together using addition and output the result. For example, 4 multiplied by 3 would be 4 + 4 + 4 = 12.

You can assume the function `input` takes in a value as an integer.

```
numA = input("Enter first number")
numB = input("Enter second number")

answer = 0

while (numB > 0)
   answer = answer + numA
   numB = numB - 1
endwhile

print(answer)
```

Write this algorithm in assembly language using the Little Man Computer (LMC) instruction set.

.....

.....

.....

.....

.....

.....

.....

.....

.....

.....

.....

.....

.....

.....

..... **[6]**

© OCR 2024

5 An online shop uses a website to sell its products. Part of the HTML code that is used for a login form on the website is shown here.

```
<p>
   <label>Username:</label>
   <input type="text" id="userName">
</p>
<p>
   <label>Password: </label>
   <input type="text" id="Password" onchange="errorCheck()">
</p>
<p>
   <label id="errorText">
</p>
```

The `<label>` tag will instruct the user what information they need to enter. The code `onchange` will run a function called `errorCheck` automatically after a password has been entered. The function `errorCheck` will check that the password is a suitable length.

Write JavaScript code for the function `errorCheck` which:

- checks the length of the password is between 8 and 12 characters (including 8 and 12)
- displays the message "Password Length Error" in the HTML `label` tag identified by the id `errorText` if the length is not between 8 and 12 characters.

.....

.....

.....

.....

.....

.....

.....

.....

.....

.....

.....

.....

.....

.....

..... **[5]**

© OCR 2024

6

(a) Using the binary value 1001 1101, convert this into:

(i) A positive denary number.

.....

..... **[1]**

(ii) A negative denary number using two's complement.

.....

..... **[1]**

(iii) A hexadecimal value.

.....

..... **[1]**

© OCR 2024

(b)* Binary values stored by a computer can represent different types of data.

Discuss the different types of data that can be stored in binary and why computer systems store data in binary format.

You should refer to the following in your answer:

- what types of data can be represented in binary
- examples of how binary is used to represent this data
- why computers store data in binary format. **[9]**

.....

.....

.....

.....

.....

.....

.....

.....

.....

.....

.....

.....

.....

.....

.....

.....

.....

.....

.....

.....

.....

.....

© OCR 2024

© OCR 2024

7

(a) A logic gate diagram is shown below.

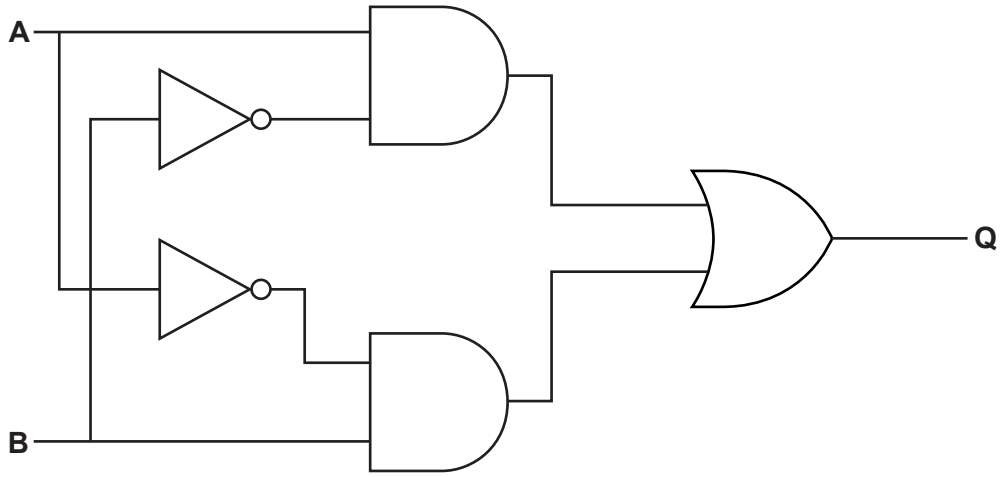

(i) Complete the truth table for this logic gate diagram.

A	B	Q
0	0	
0	1	
1	0	
1	1	

[2]

(ii) What single gate is this logic gate diagram equivalent to?

.....

..... **[1]**

© OCR 2024

(b) Draw the logic gate diagram for this expression:

$Q = (A \vee \neg B) \wedge C$

[3]

END OF QUESTION PAPER

© OCR 2024

PLEASE DO NOT WRITE ON THIS PAGE

OCR
Oxford Cambridge and RSA

Copyright Information

OCR is committed to seeking permission to reproduce all third-party content that it uses in its assessment materials. OCR has attempted to identify and contact all copyright holders whose work is used in this paper. To avoid the issue of disclosure of answer-related information to candidates, all copyright acknowledgements are reproduced in the OCR Copyright Acknowledgements Booklet. This is produced for each series of examinations and is freely available to download from our public website (www.ocr.org.uk) after the live examination series.

If OCR has unwittingly failed to correctly acknowledge or clear any third-party content in this assessment material, OCR will be happy to correct its mistake at the earliest possible opportunity.

For queries or further information please contact The OCR Copyright Team, The Triangle Building, Shaftesbury Road, Cambridge CB2 8EA.

OCR is part of the Cambridge Assessment Group; Cambridge Assessment is the brand name of University of Cambridge Local Examinations Syndicate (UCLES), which is itself a department of the University of Cambridge.

© OCR 2024